User Manual

Integrated Solar Wall Light

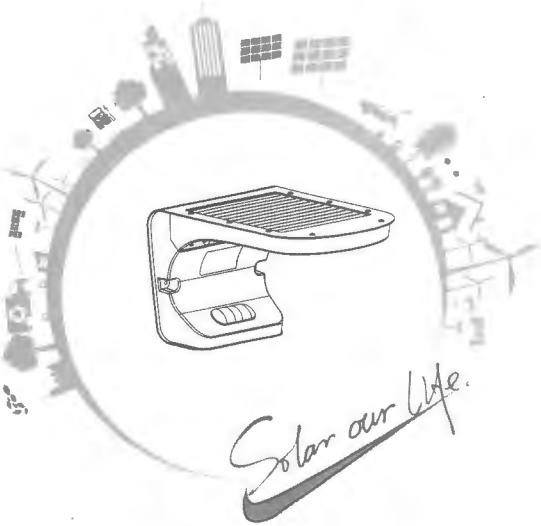

Lamination:

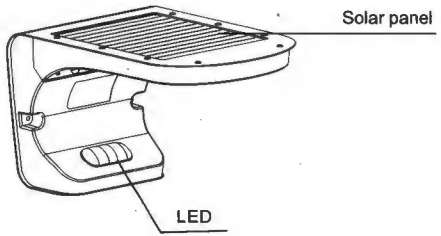

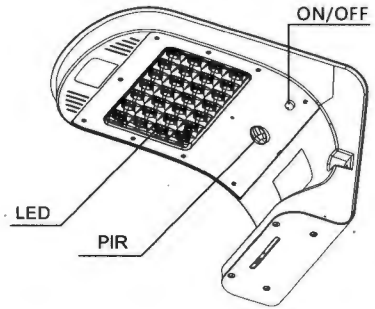

Electrical Characteristics:

Solar panel	3W
Battery type	Li-ion
Led	10W
Charging time	9 hours
Lighting mode	Long press the black button for 3S to turn on the lamp. Short press the red button for 1S to change lighting mode M1 or M2 Short press the button to change to M1/M2: M1: DIM Light 5% + PIR full brightness 30S M2: DIM Light 15% + PIR full brightness 30S Memory function: When turn on the lamp, it will go into the last lighting mode which you have set before.
Lighting time	>3nights
Waterproof	IP65
Material	Aluminum alloy +ABS

Charging Temperate: 0~45° Discharging Temperate: -10°~60°
Storage Temperate: -20~60°

Operation Instructions:

How to activate the light?

Long press the black button for 3S to turn on the lamp and long press 3S again will turn off the lamp

When turn on the lamp, it will go into the last lighting mode which you have set before.

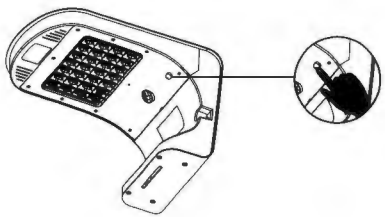

How to install the device?

Please use the supplied Expansion pillar-hinge and screws to mount the light on pole or wall

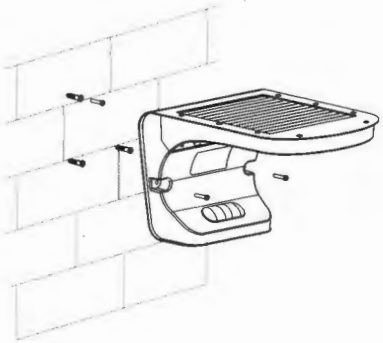

Working process instructions

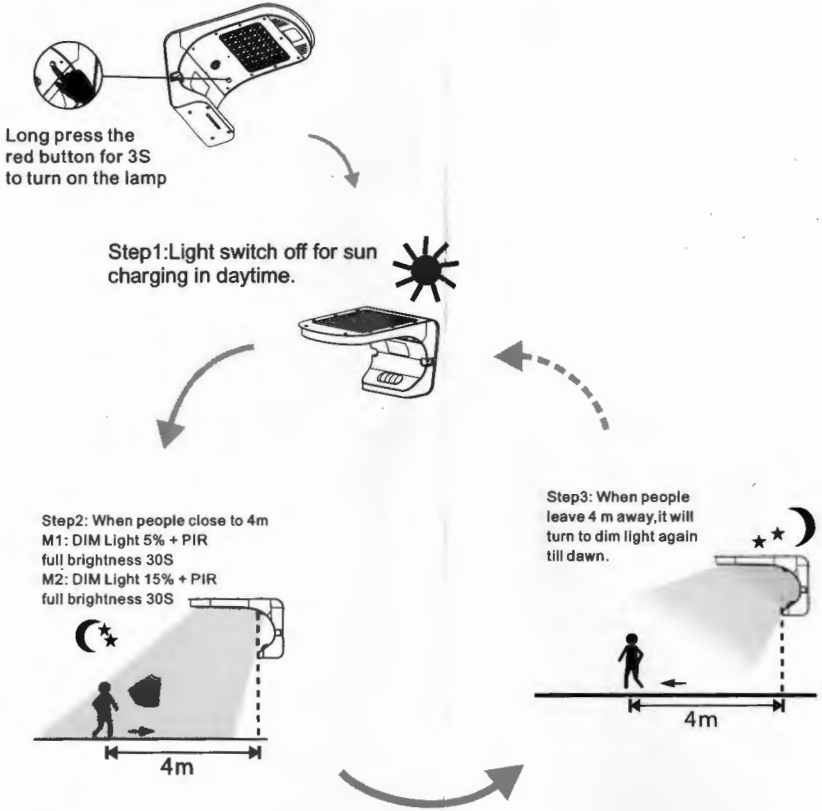

Warning:

1.Keep the device away from fire and oil in order to avoid any fire or explosion.
2.Any severe shock or smash to the light is not recommended ;
3.No one except professional technicians should attempt to disassemble the light in order to avoid damaging the light.

Special Note:

1).Please push the button to turn on the lamp before install.
2).Please give bright sunlight charging over 5 hours before first time use, as the battery is very low from factory.
3).If it doesn't get charged for one week, the battery maybe out of power, you have to charge it under bright sunlight.
4).If the sun power less than the standarded condition:
1.illumination intensity: 1000W/m²,
2.temperature: 25C° , it will need longer charging time or the lighting time will be less than the data we listed in the Specification, but it's normal for all solar products over the world.